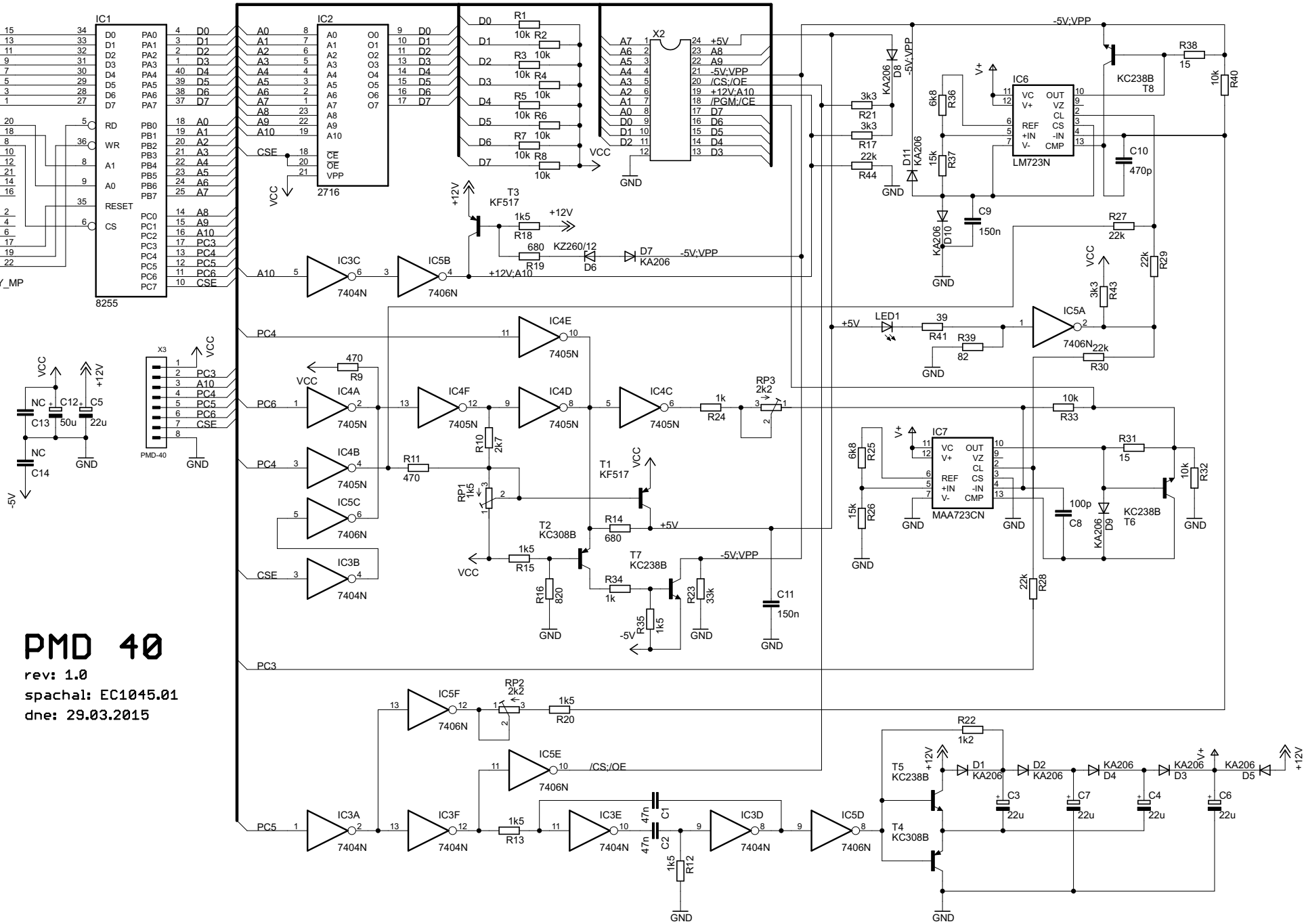
X1
PMD_ROM_TY_MP
IC1
8255
IC2
2716
X2
X3
PMD-40
IC3A
IC3B
IC3C
IC3D
IC3E
IC3F
IC4A
IC4B
IC4C
IC4D
IC4E
IC4F
IC5A
IC5B
IC5C
IC5D
IC5E
IC5F
IC6
LM723N
IC7
MAA723CN
T1 KF517
T2 KC308B
T3 KF517
T4 KC308B
T5 KC238B
T6 KC238B
T7 KC238B
T8 KC238B
LED1
PMD 40
rev: 1.0
spachal: EC1045.01
dne: 29.03.2015