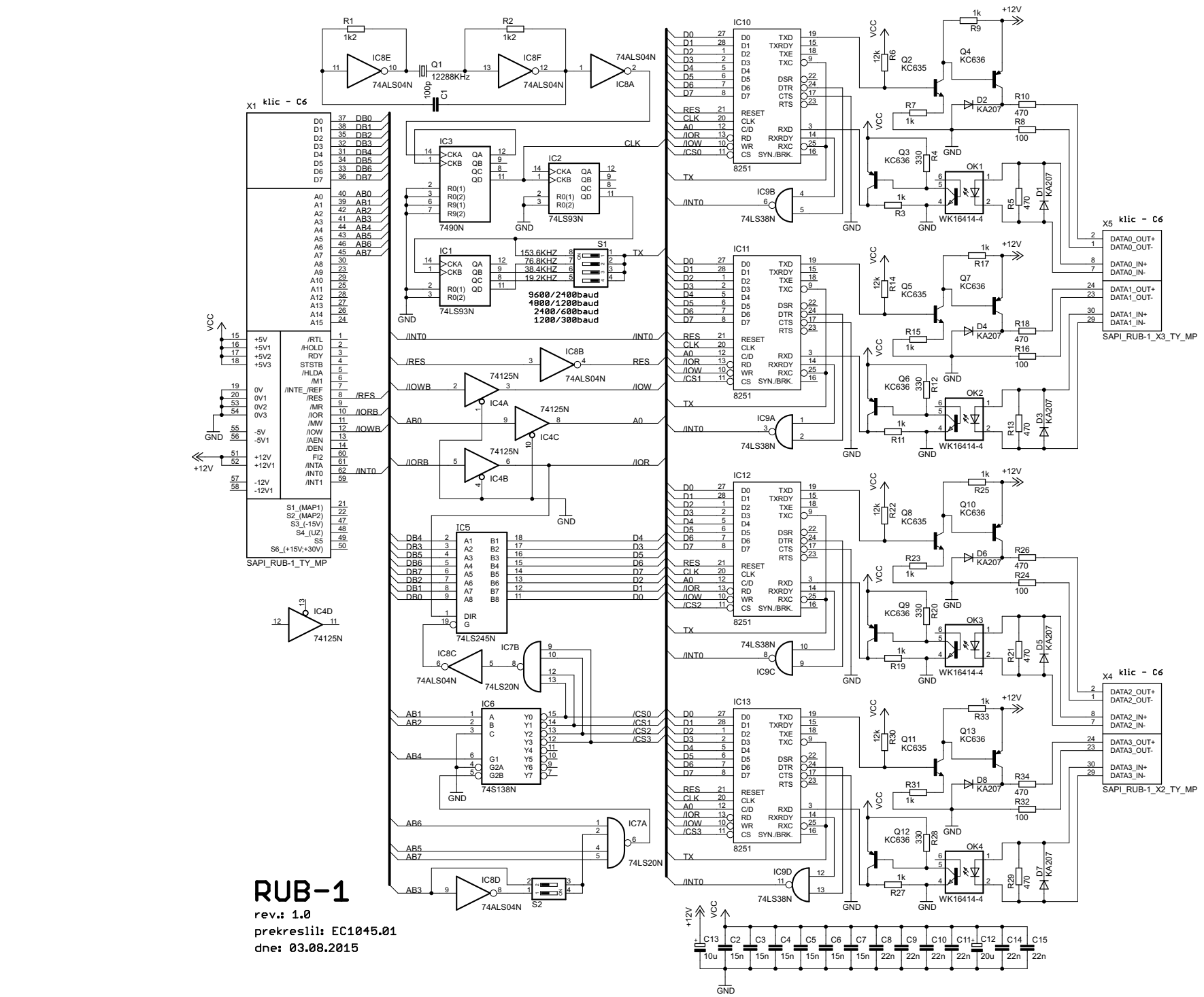
RUB-1
rev.: 1.0
prekreslil: EC1045.01
dne: 03.08.2015
X1 klic - C6
SAPI_RUB-1_TY_MP
X5 klic - C6
SAPI_RUB-1_X3_TY_MP
X4 klic - C6
SAPI_RUB-1_X2_TY_MP
IC8E 74ALS04N
IC8F 74ALS04N
IC8A 74ALS04N
Q1 12288KHz
IC3 7490N
IC2 74LS93N
IC1 74LS93N
S1
153.6KHZ
76.8KHZ
38.4KHZ
19.2KHZ
9600/2400baud
4800/1200baud
2400/600baud
1200/300baud
IC8B 74ALS04N
IC4A 74125N
IC4C 74125N
IC4B 74125N
IC4D 74125N
IC5 74LS245N
IC8C 74ALS04N
IC7B 74LS20N
IC6 74S138N
IC7A 74LS20N
IC8D 74ALS04N
S2
IC10 8251
IC11 8251
IC12 8251
IC13 8251
IC9B 74LS38N
IC9A 74LS38N
IC9C 74LS38N
IC9D 74LS38N
Q2 KC635
Q3 KC636
Q4 KC636
Q5 KC635
Q6 KC636
Q7 KC636
Q8 KC635
Q9 KC636
Q10 KC636
Q11 KC635
Q12 KC636
Q13 KC636
D1 KA207
D2 KA207
D3 KA207
D4 KA207
D5 KA207
D6 KA207
D7 KA207
D8 KA207
OK1 WK16414-4
OK2 WK16414-4
OK3 WK16414-4
OK4 WK16414-4
C13 10u
C2 15n
C3 15n
C4 15n
C5 15n
C6 15n
C7 15n
C8 22n
C9 22n
C10 22n
C11 22n
C12 20u
C14 22n
C15 22n