MUX

rev:. 4.0
spachal: EC1045.01
dne: 23.06.2013

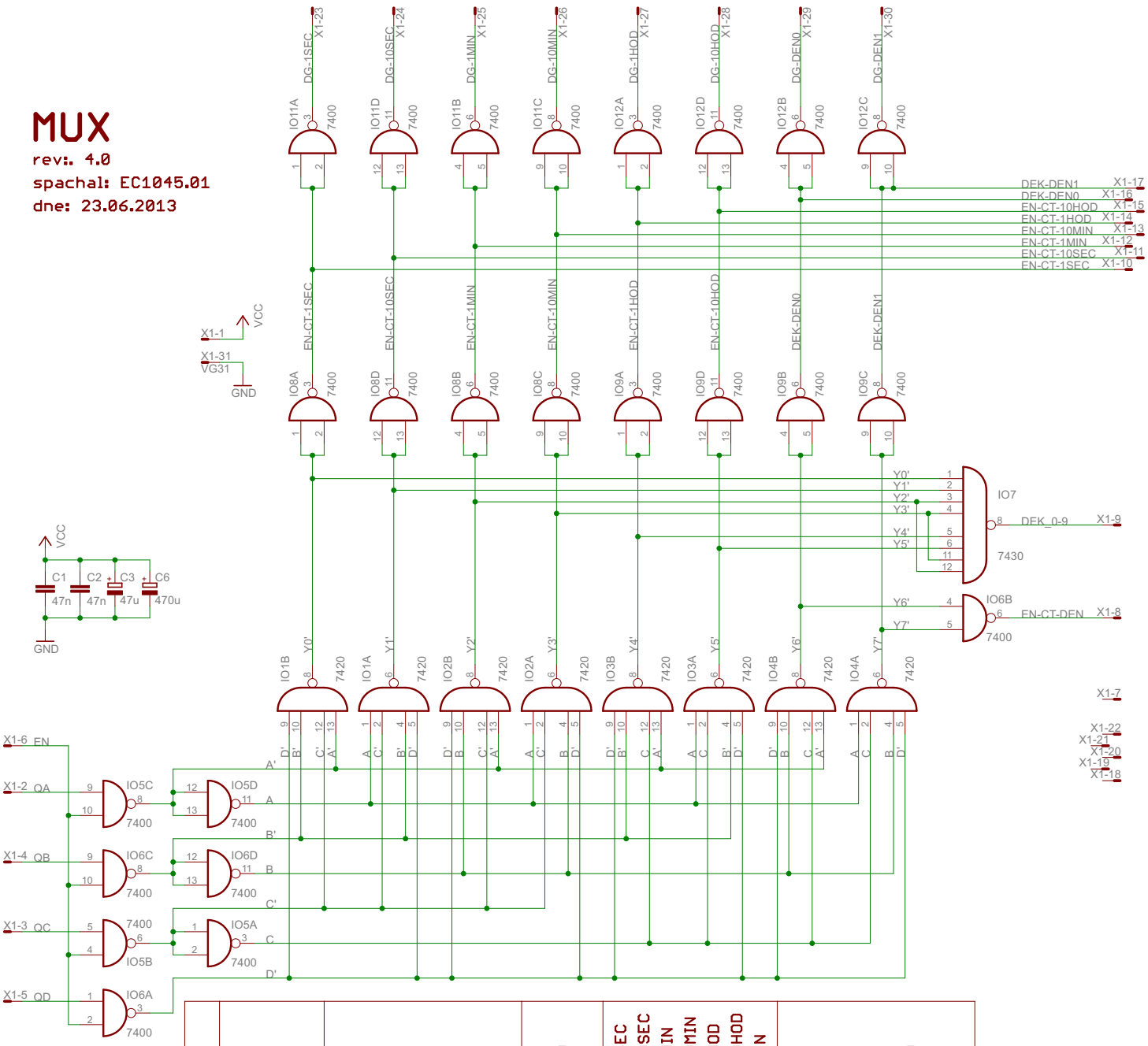

EN	QA	QB	QC	QD	Y0'	Y1'	Y2'	Y3'	Y4'	Y5'	Y6'	Y7'	DEK_0-9	DEK-DEN0	DEK-DEN1	EN-CT-1SEC	EN-CT-10SEC	EN-CT-1MIN	EN-CT-10MIN	EN-CT-1HOD	EN-CT-10HOD	EN-CT-DEN	DG-1SEC	DG-10SEC	DG-1MIN	DG-10MIN	DG-1HOD	DG-10HOD	DG-DEN0	DG-DEN1
0	X	X	X	X	1	1	1	1	1	1	1	1	0	0	0	0	0	0	0	0	0	0	1	1	1	1	1	1	1	1
1	0	0	0	0	0	1	1	1	1	1	1	1	1	0	0	1	0	0	0	0	0	0	0	1	1	1	1	1	1	1
1	1	0	0	0	1	0	1	1	1	1	1	1	1	0	0	0	1	0	0	0	0	0	1	0	1	1	1	1	1	1
1	0	1	0	0	1	1	0	1	1	1	1	1	1	0	0	0	0	1	0	0	0	0	1	1	0	1	1	1	1	1
1	1	1	0	0	1	1	1	0	1	1	1	1	1	0	0	0	0	0	1	0	0	0	1	1	1	0	1	1	1	1
1	0	0	1	0	1	1	1	1	0	1	1	1	1	0	0	0	0	0	0	1	0	0	1	1	1	1	0	1	1	1
1	1	0	1	0	1	1	1	1	1	0	1	1	1	0	0	0	0	0	0	0	1	0	1	1	1	1	1	0	1	1
1	0	1	1	0	1	1	1	1	1	1	0	1	0	1	0	0	0	0	0	0	0	1	1	1	1	1	1	1	0	1
1	1	1	1	0	1	1	1	1	1	1	1	0	0	0	1	0	0	0	0	0	0	1	1	1	1	1	1	1	1	0
1	0	0	0	1	1	1	1	1	1	1	1	1	0	0	0	0	0	0	0	0	0	0	1	1	1	1	1	1	1	1
1	1	0	0	1	1	1	1	1	1	1	1	1	0	0	0	0	0	0	0	0	0	0	1	1	1	1	1	1	1	1
		....					....						....					....							....				
1	1	1	1	1	1	1	1	1	1	1	1	1	0	0	0	0	0	0	0	0	0	0	1	1	1	1	1	1	1	1