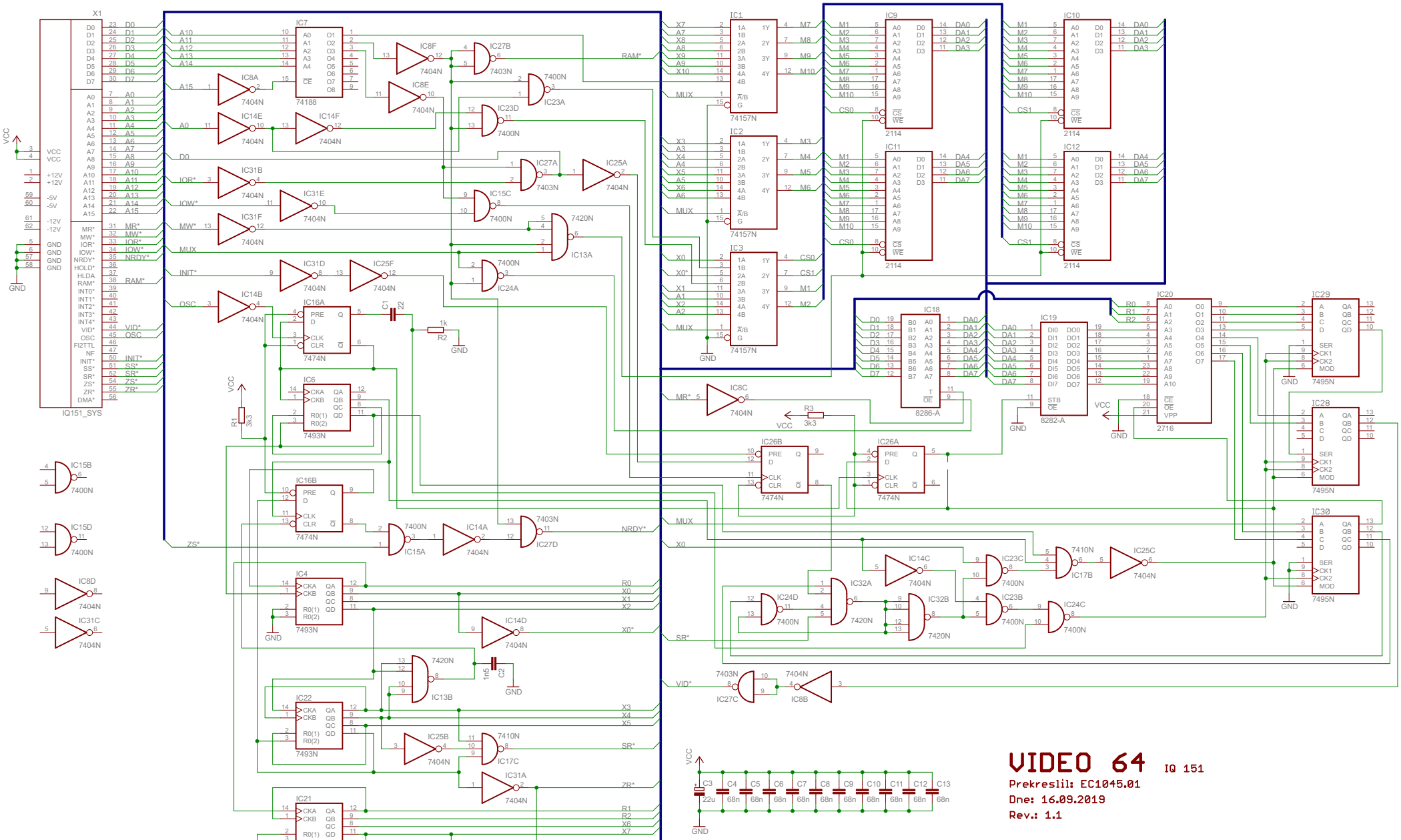
X1
IQ151_SYS
IC7
74188
IC1
74157N
IC2
74157N
IC3
74157N
IC9
2114
IC10
2114
IC11
2114
IC12
2114
IC18
8286-A
IC19
8282-A
IC20
2716
IC29
7495N
IC28
7495N
IC30
7495N
IC16A
7474N
IC16B
7474N
IC26B
7474N
IC26A
7474N
IC6
7493N
IC4
7493N
IC22
7493N
IC21
7493N
IC5
7490N
VCC
GND
R1
3k3
R2
1k
R3
3k3
C1
22
C2
1n5
C3
22u
C4
68n
C5
68n
C6
68n
C7
68n
C8
68n
C9
68n
C10
68n
C11
68n
C12
68n
C13
68n
VIDEO 64
IQ 151
Prekreslil: EC1045.01
Dne: 16.09.2019
Rev.: 1.1