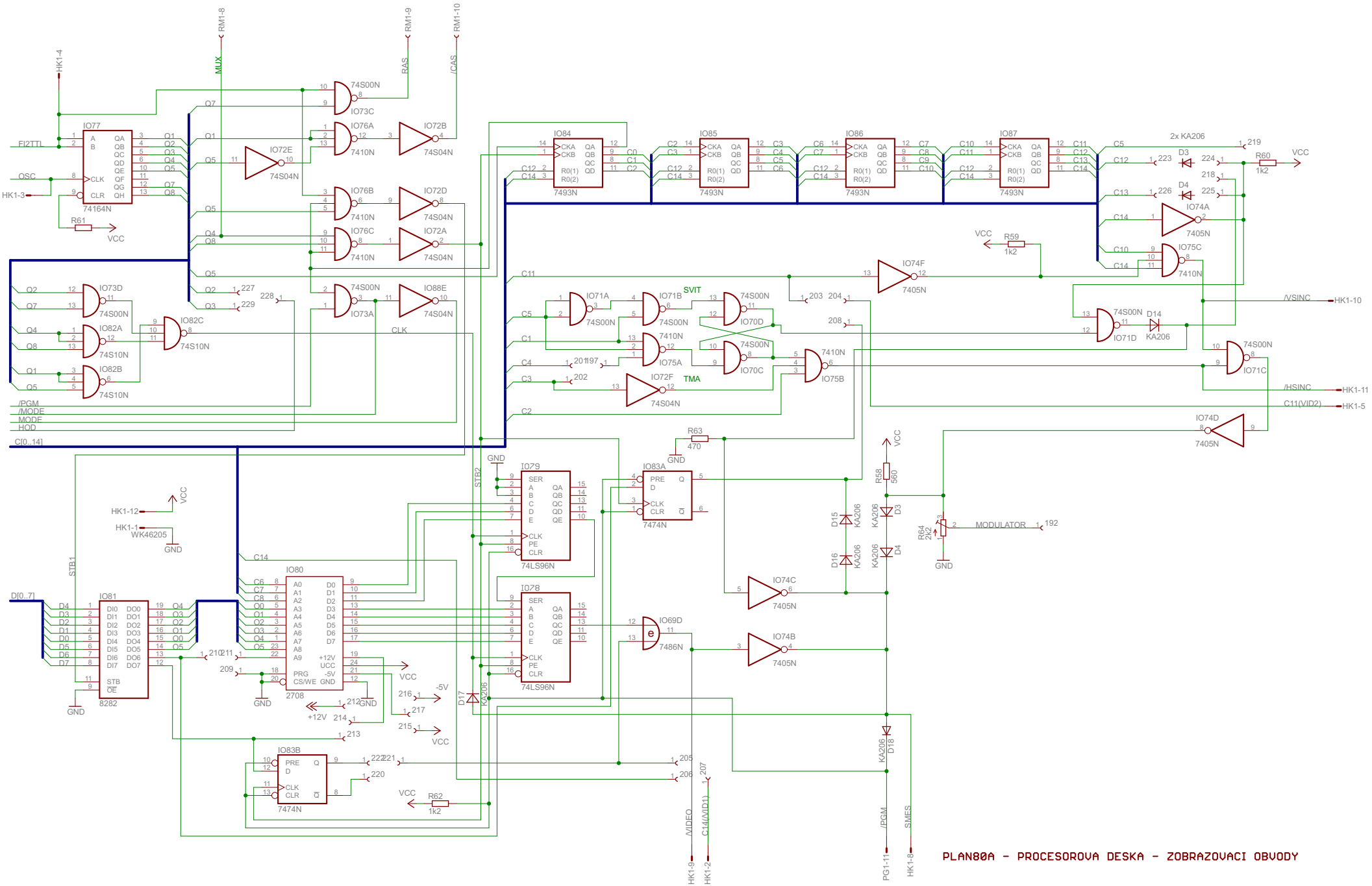
PLAN80A - PROCESOROVA DESKA - ZOBRAZOVACI OBVODY
IO77
74164N
IO84
IO85
IO86
IO87
7493N
IO73C
IO76A
IO76B
IO76C
IO73A
IO73D
IO82A
IO82B
IO82C
IO72E
IO72B
IO72D
IO72A
IO88E
IO74F
IO74A
IO75C
IO71A
IO71B
IO75A
IO72F
IO70D
IO70C
IO75B
IO71D
IO71C
IO74D
IO74C
IO74B
IO69D
IO83A
IO83B
IO79
IO78
IO80
IO81
74LS96N
7474N
7486N
8282
2708
74S00N
74S04N
74S10N
7410N
7405N
KA206
2x KA206
SVIT
TMA
CLK
MUX
RAS
/CAS
RM1-8
RM1-9
RM1-10
HK1-4
HK1-3
HK1-12
HK1-1
WK46205
HK1-10
HK1-11
HK1-5
HK1-9
HK1-2
HK1-8
PG1-11
/VSINC
/HSINC
C11(VID2)
MODULATOR
/VIDEO
C14(/VID1)
/PGM
SMES
STB1
STB2
D[0..7]
C[0..14]
/PGM
/MODE
MODE
HOD
FI2TTL
OSC
VCC
GND
-5V
+12V