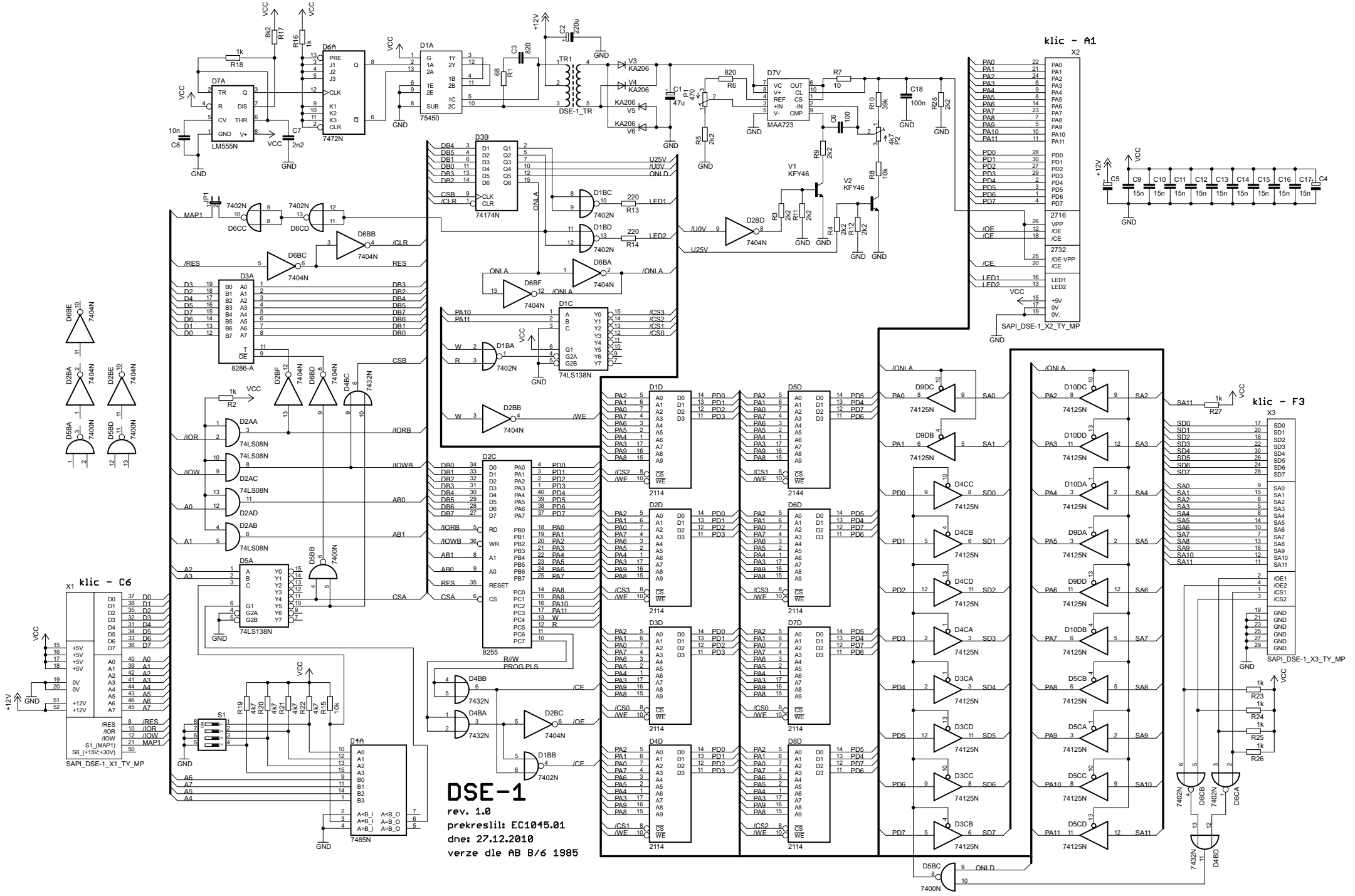
DSE-1
rev. 1.0
prekreslil: EC1045.01
dne: 27.12.2010
verze dle AB B/6 1985
klic - A1
klic - C6
klic - F3
SAPI_DSE-1_X1_TY_MP
SAPI_DSE-1_X2_TY_MP
SAPI_DSE-1_X3_TY_MP
LM555N
7472N
75450
DSE-1_TR
MAA723
74174N
8286-A
74LS138N
8255
7485N
2114
2144
74125N
2716
2732