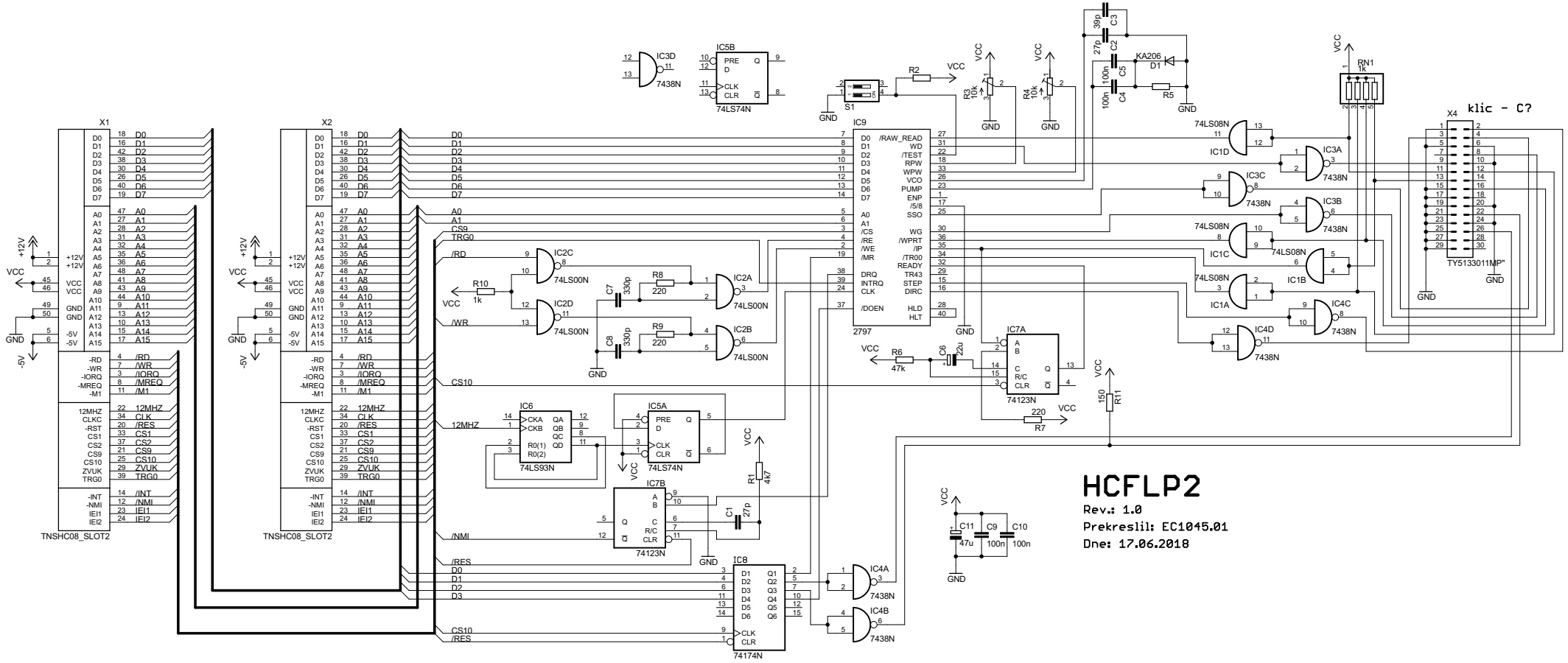
HCFLP2
Rev.: 1.0
Prekreslil: EC1045.01
Dne: 17.06.2018
klic - C?
X1
TNSHC08_SLOT2
X2
TNSHC08_SLOT2
IC9
2797
IC5B
74LS74N
IC3D
7438N
IC2C
74LS00N
IC2D
74LS00N
IC2A
74LS00N
IC2B
74LS00N
IC6
74LS93N
IC5A
74LS74N
IC7B
74123N
IC7A
74123N
IC8
74174N
IC4A
7438N
IC4B
7438N
IC4C
7438N
IC4D
7438N
IC1D
74LS08N
IC3A
7438N
IC3C
7438N
IC3B
7438N
IC1C
74LS08N
IC1B
74LS08N
IC1A
74LS08N
X4
TY5133011MP"
RN1
1k
S1
KA206
D1
R2
R3
10k
R4
10k
R5
R6
47k
R7
220
R8
220
R9
220
R10
1k
R11
150
R1
4k7
C1
27p
C2
27p
C3
39p
C4
100n
C5
100n
C6
22u
C7
330p
C8
330p
C9
100n
C10
100n
C11
47u
VCC
GND
+12V
-5V