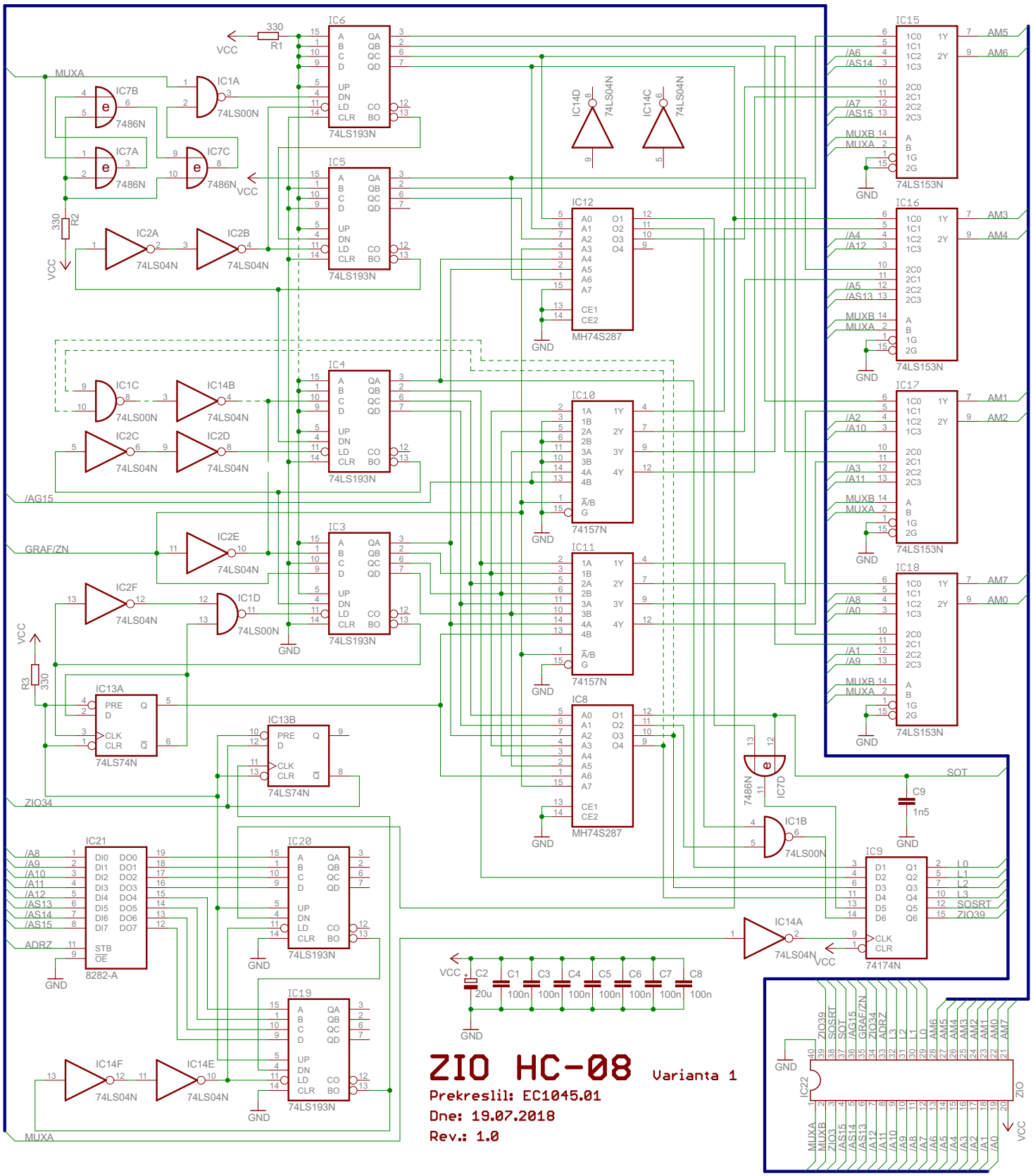
ZIO HC-08
Varianta 1
Prekreslil: EC1045.01
Dne: 19.07.2018
Rev.: 1.0
IC6
IC5
IC4
IC3
74LS193N
IC15
IC16
IC17
IC18
74LS153N
IC12
MH74S287
IC10
IC11
74157N
IC8
IC21
8282-A
IC20
IC19
IC9
74174N
IC13A
IC13B
74LS74N
IC22
MUXA
MUXB
ZIO34
ZIO39
SOSRT
SOT
/AG15
GRAF/ZN
ADRZ
VCC
GND
ZIO