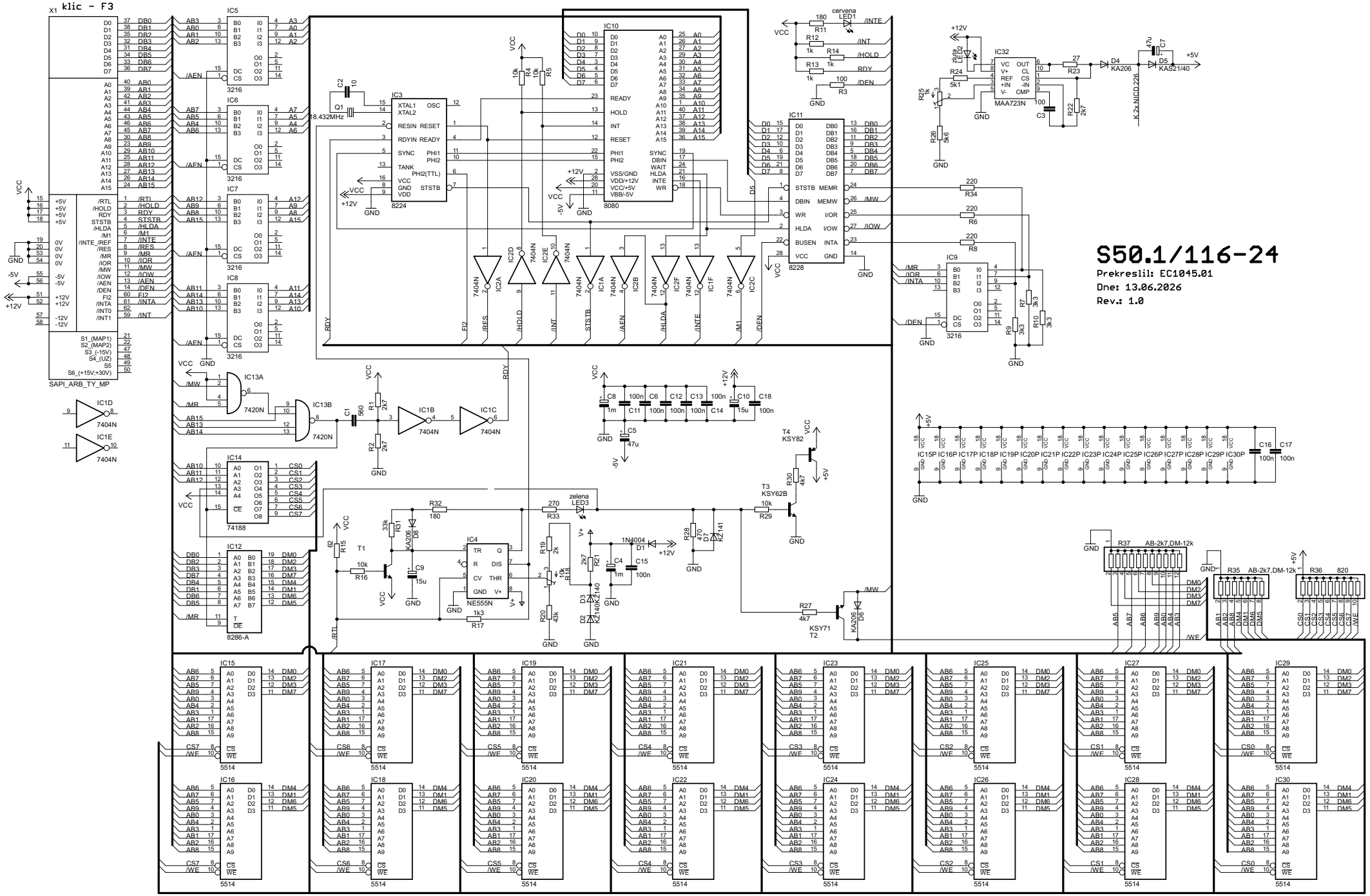
klic - F3
X1
SAPI_ARB_TY_MP
IC5
IC6
IC7
IC8
3216
IC3
8224
IC10
8080
IC11
8228
IC9
IC32
MAA723N
IC13A
7420N
IC13B
IC1D
IC1E
7404N
IC14
74188
IC12
8286-A
IC4
NE555N
T1
T2
T3
T4
KSY82
KSY62B
KSY71
LED1
LED2
LED3
cervena
zelena
D4
KA206
D5
KAS21/40
K2x.NICD.226
18.432MHz
Q1
C2
10
R4
10k
R5
R11
180
R12
1k
R13
1k
R14
1k
R3
100
R24
5k1
R25
1k
R26
5k6
R23
27
R22
2k7
C3
100
C7
47u
R34
220
R6
220
R8
220
R7
3k3
R10
3k3
R9
3k3
IC15P IC16P IC17P IC18P IC19P IC20P IC21P IC22P IC23P IC24P IC25P IC26P IC27P IC28P IC29P IC30P
C16
C17
100n
R37
AB-2k7,DM-12k
R35
AB-2k7,DM-12k
R36
820
IC15
IC16
IC17
IC18
IC19
IC20
IC21
IC22
IC23
IC24
IC25
IC26
IC27
IC28
IC29
IC30
5514
S50.1/116-24
Prekreslil: EC1045.01
Dne: 13.06.2026
Rev.: 1.0