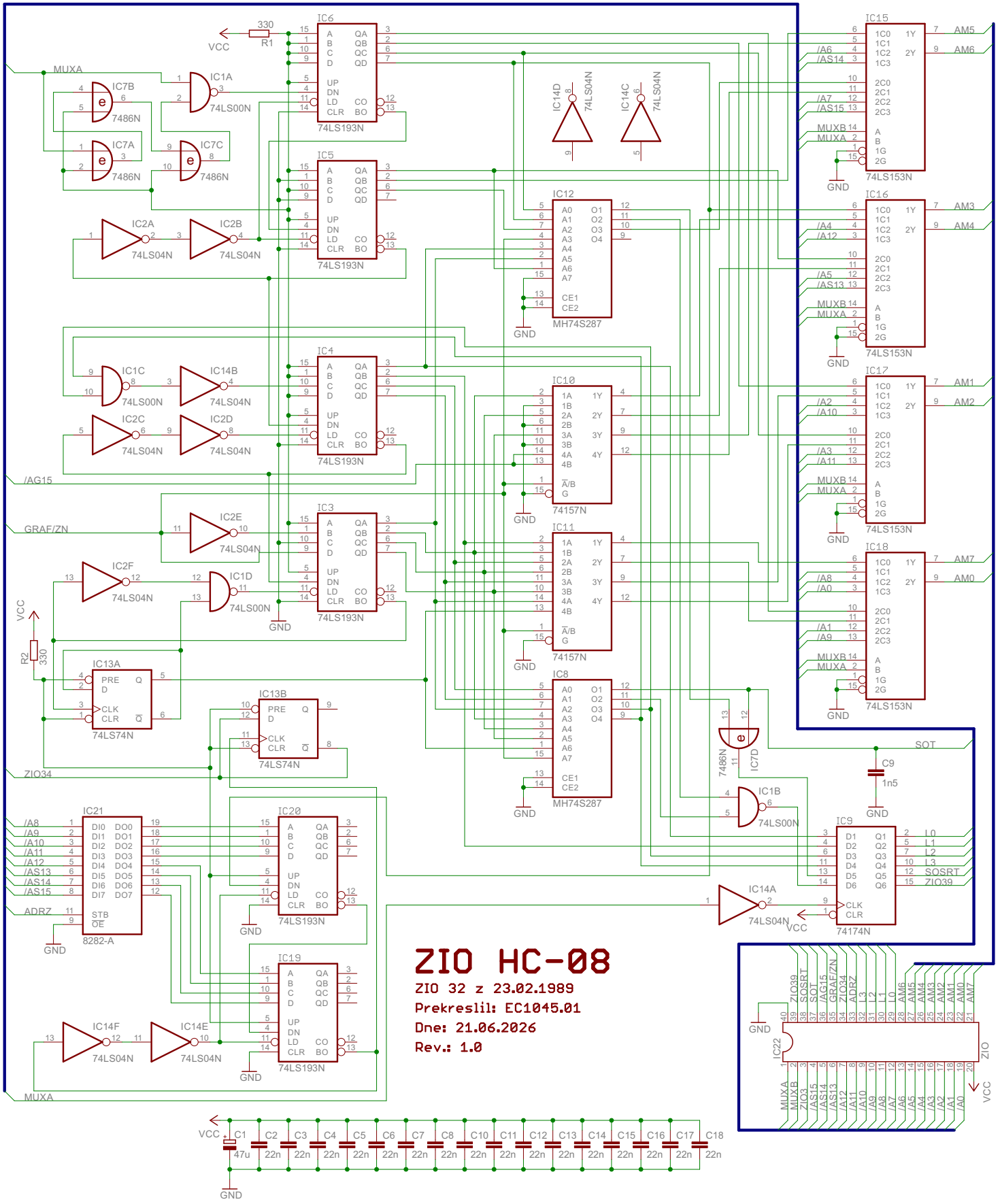
ZIO HC-08
ZIO 32 z 23.02.1989
Prekreslil: EC1045.01
Dne: 21.06.2026
Rev.: 1.0
IC6
IC5
IC4
IC3
74LS193N
IC15
IC16
IC17
IC18
74LS153N
IC12
MH74S287
IC10
IC11
74157N
IC8
IC9
74174N
IC13A
IC13B
74LS74N
IC21
8282-A
IC20
IC19
IC22
IC1A
IC1B
IC1C
IC1D
IC2A
IC2B
IC2C
IC2D
IC2E
IC2F
IC7A
IC7B
IC7C
IC7D
IC14A
IC14B
IC14C
IC14D
IC14E
IC14F
74LS00N
74LS04N
7486N
R1
R2
330
C9
1n5
VCC
GND
MUXA
/AG15
GRAF/ZN
ZIO34
ADRZ
SOT
ZIO
AM5
AM6
AM3
AM4
AM1
AM2
AM7
AM0
L0
L1
L2
L3
SOSRT
ZIO39